REDEKOP™

BLADE INSTALLATION MANUAL

BK036-01_R5

Safety

INSPECT THE STRAW CHOPPER BEFORE YOU OPERATE

Inspect the straw chopper for damage:

• Check all blades and stationary blades for excessive metal wear, cracks, or other visible damage.
• Check for loose, worn, damaged or missing parts.
• Check and tighten the straw chopper hardware, especially the rotor blade mount bolts.
• All guards and shields must be in good condition and fastened in place before operating.
• Make sure all caution and warning decals are clearly visible and readable.
• Make sure all safety devices are correctly fitted and operative.

STAY CLEAR OF CHOPPER DISCHARGE AREA

Look and listen to ensure that all motion has ceased on combine and straw chopper before moving in the vicinity of the straw chopper, making adjustments to the chopper drive, spreading fins, cutter bar, or any other section of the combine. Flying chaff, straw and other debris can cause serious personal injury. Keep all persons clear of the spreading or collecting unit at all times. Chaff, straw and other objects can be propelled to distances of 50 feet or more, and hard objects like stones much further still. See (A)

A

KEEP HANDS AWAY FROM RUNNING CHOPPER

Keep hands and any other objects away from chopper when combine is running.

Remember, the Redekop chopper rotor draws a large amount of air from the combine and could easily draw in a hand or other object that is placed too close to it's blades. See (B)

B

STAY CLEAR OF MOVING PARTS

Keep safety shield provided in place at all times. Contact with either the pulley or belt while chopper is running can cause serious injury.

Keep hands and any other objects away from chopper when combine is running.

Make sure the factory safety shields are correctly installed and well maintained. Never remove the shields from the straw chopper. See (C)

C

CAUTION: When chopping corn, sunflowers or hemp - the knifebar blades MUST BE ALL THE WAY OUT of the chopper housing and ROTOR RUN ON SLOW SPEED (800-1200 rpm)

CORN!
SUNFLOWERS!
HEMP!

If you have any questions regarding the operation, maintenance, or service of your straw chopper rotor, contact your Redekop dealer or Redekop Manufacturing direct at (306) 931-6664 or toll free at 1-866-733-3567

Rotor Blade Installation Procedure

IMPORTANT! The fan blades, located on the balance rings on ends of rotor, must be installed in the direction shown (A). The straight edge of the blade cuts the air while the paddle trails behind and pushes the air.

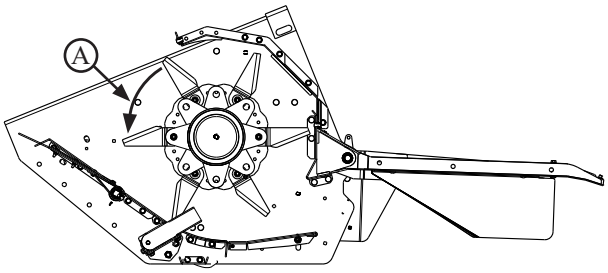

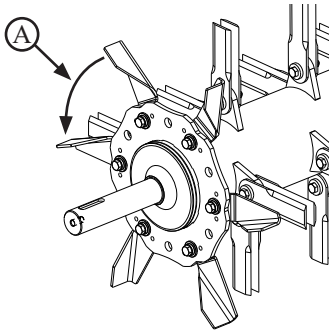

1 The blades for your chopper must be installed as outlined.
Note: If blades are installed other than as directed, damage to the chopper may result or performance may be significantly reduced.

IMPORTANT! Chopper balance MUST be maintained

Blades have been sorted by weight and may be color coded on edge of blade

Ensure Blades with the same colored edge are installed opposite of each other and other end of rotor
- failure to assemble as noted will result in an unbalanced rotor

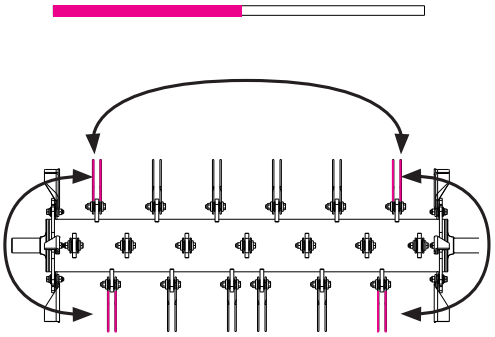

1.1 Replace BOTH blades on single support and BOTH blades opposite support (180 deg). Also, replace the four at the other end of the rotor, at the same axial distance from the balance ring.

Eight blades MUST be installed to replace one broken blade, or all the blades can be replaced at one time. This MUST be done to keep vibration to a minimum.

Never replace only one blade for wear or breakage

1.2 If a blade breaks and the chopper must be operated without a replacement, then the damaged blade and the one directly opposite and the corresponding blades on the opposite end of the rotor must be removed to maintain rotor balance. A total of four blades to be removed.

1.3 Use only METRIC class 10.9 bolts (**B**) and class 10 DIN980V all steel lock nuts (**F**) on the chopper rotor.

1.4 Use a torque wrench to tighten all nuts to the recommended values:

M10 nuts to 45 ft-lbs or 60 Nm
M12 nuts to 60 ft-lbs or 80 Nm

1.5 Always check for adequate clearance between the installed blades and the stationary knives. A minimum of 6mm or 1/4" is required. Check clearance of all blades, even those that are not replaced. Do not operate the straw chopper unless this clearance is maintained for all blades.

2 Assemble blade pairs as per order shown (**B** to **F**)

3 When ordering replacement blades, identify the blade part number stamped on the side of the blade and do a physical count of the quantity required.

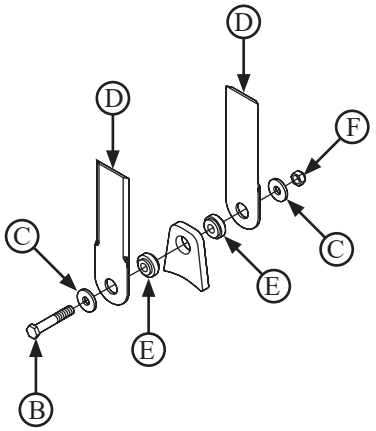

A - Blade direction
B - Hex Bolt
C - Washer
D - Rotating Blade
E - Bushing
F - Lock nut

CAUTION: Always use METRIC class 10.9 bolts and matching class 10 all steel lock nuts when installing blades.

Note: Torque values listed are for chopper blade installation only, based on the strength of the bolt. DO NOT use these values for different procedures or applications.

Rotor Blade Installation Pattern:

Always maintain original factory provided blade pattern except as noted.

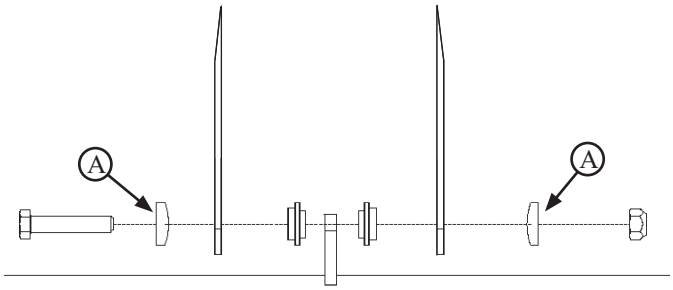

During assembly apply washer convex side to the blade and flat side to bolt/nut. This prevents blades from blocking.

John Deere 50 series:

- replace all paddle blades with the provided paddle blades (60)

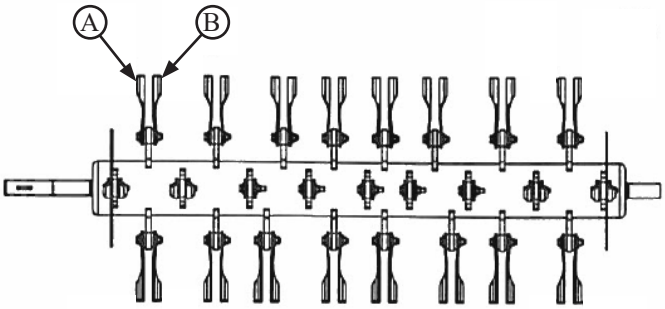

John Deere 60 series:

- replace all paddle blades (**A** & **B**) with the provided paddle blades (48)

- replace all straight blades (**C** & **D**) with the provided straight blades (20)

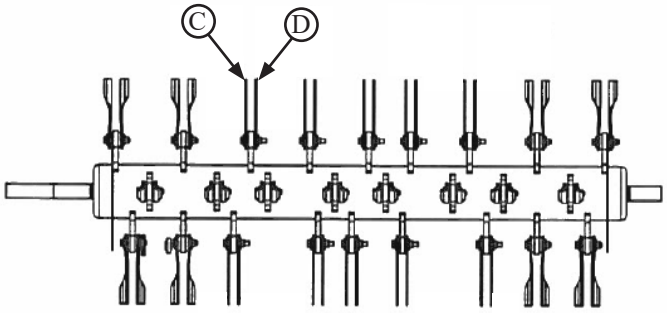

John Deere 70 and S series:

- replace all wing blades (**A** & **B**) with the provided straight blades (44). The wings on the factory blades do not create significant airflow. Replacement with the straight blades increases blade life and cutting performance.

- the fan blades (**C**) on both ends of the rotor remain in place. These fan blades create the air flow to spread the chopped straw.

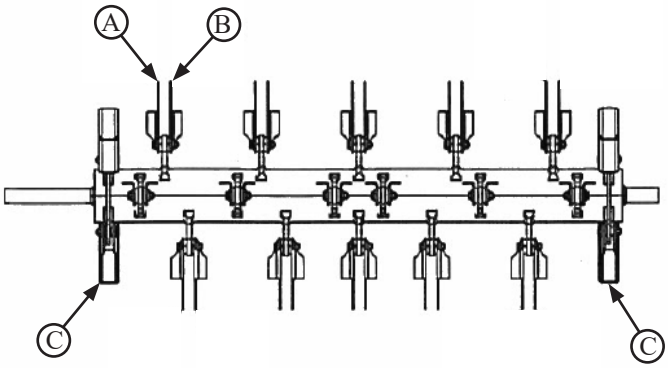

New Holland:
- install blades as per the diagram

These chopper blades have not been designed to operate on choppers running greater than 3500 rpm. Doing so, Blades will fatigue and break, possibly causing personal injury or machine damage. Operating at a slower speed will consume less fuel, increase blade life and preserve cutting quality. Order and install Slow Down Kit #CH720K to operate these chopper blades on these combines.

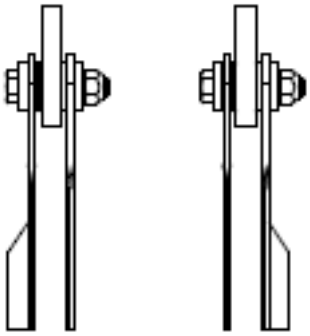

P = PADDLE
S = STRAIGHT

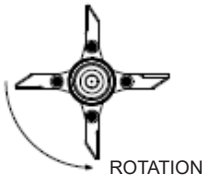

CR/CX WIDE ROTORS - 68 blades

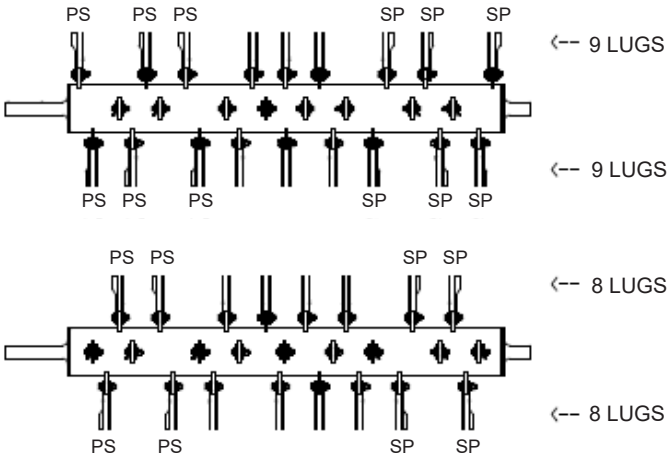

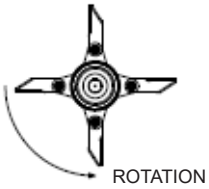

CR NARROW ROTORS - 56 blades

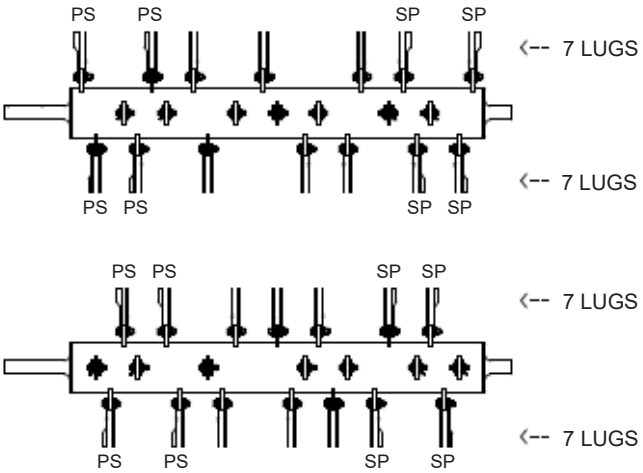

NH DOT Series:

6 row, 88 blade rotor (70 straight, 18 paddle blades)

Maintain original factory blade pattern and ensure to begin pattern using the exact same lug positions:
- every other row, install paddle/straight on the first 3 lugs - each end
- install straight blades on the remaining center lugs

CAUTION: Verify clearance with stationary knives

Agco / Massey / Challenger / Gleaner:
- reference for pre MAV rotors

60 Blade Rotor (20S, 40P):

Rows with 7 lugs - Paddle Blades (P) on 1st and last lugs
- Straight Blades (S) on center 5 lugs

Rows with 8 lugs - Paddle Blades (P) on all lugs

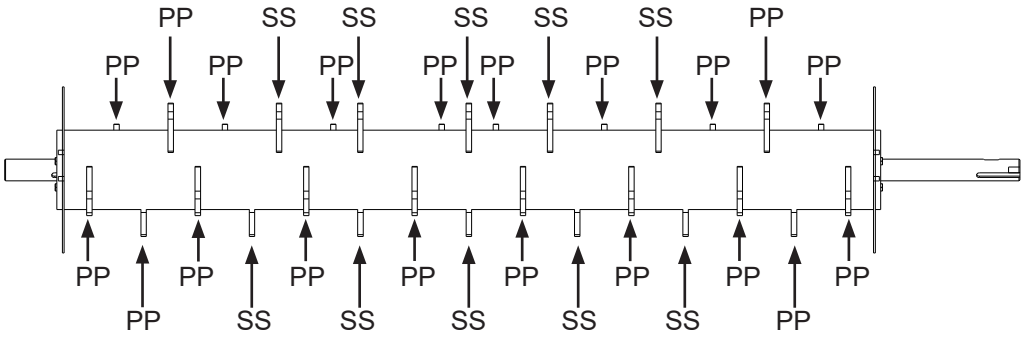

60 Blade MAV Rotor (42S, 18P):

Rows with 7 lugs - Paddle Blade (P) / Straight Blade (S) on each lug

Rows with 8 lugs - Paddle Blade (P) / Straight Blade (S) on third lug from each end

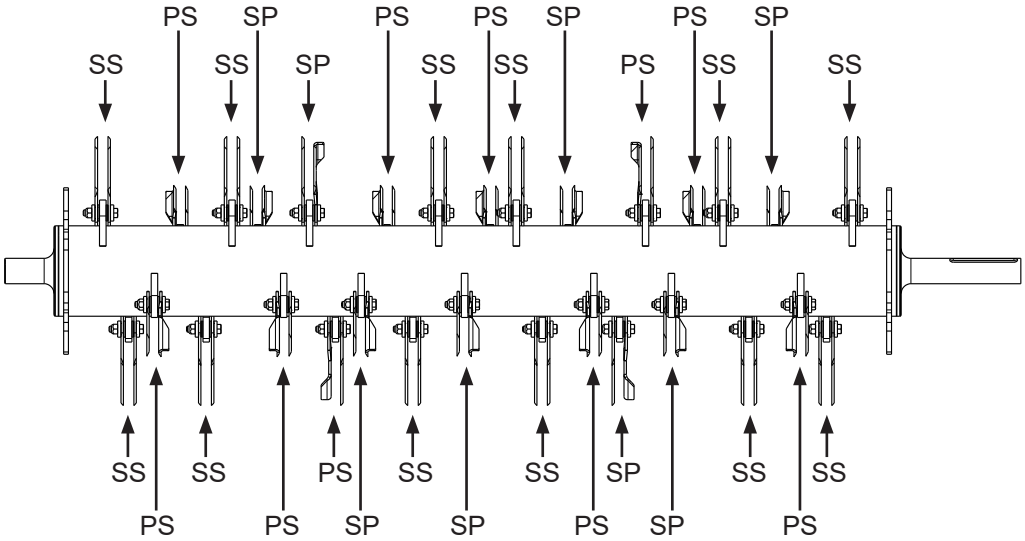

Key:

P = Paddle Blades

S = Straight Blades

CAUTION: Verify clearance with stationary knives

Note:
Check all fasteners to ensure they have been properly torqued - section 1.4.
Rotate chopper rotor manually to ensure clearance of all blades.
When starting chopper, be sure all people are clear of the rear of the combine.

Start threshing module in low speed and listen for clearance problems. If a knocking noise is heard, stop the machine immediately! Fix problem and repeat procedure. Progress to full power when everything is running smoothly at lower speeds.

TROUBLESHOOT

1. Broken blade?
If a blade breaks due to a foreign object coming through the chopper, always replace blades four pair at a time. Refer to section 1.1 for replacement blade procedure. **Never replace only one blade for wear or breakage.**

2. No spare blade replacement available?
If a blade breaks and the chopper must be operated without a replacement, then the damaged blade and the one directly opposite and the pair on the opposite end must be removed to maintain rotor balance.

3. Is a knocking sound heard when starting up the chopper?
Check for adequate clearance between the installed blades and the stationary blades. A minimum of 6mm or 1/4” is required. Check clearance of all blades, even those that are not replaced. Do not operate the straw chopper unless this clearance is maintained for all blades.

4. Insufficient clearance of rotor blades past the stationary blades?
Check that the stationary blades are centered in the middle of the slots in the chopper floor. If they are not the knife bar must be moved over.

5. Still insufficient blade clearance?
If you do not have sufficient clearance and the stationary blades are in the position specified in point #4, the rotor must be moved over. Remove all shields to access the rotor bearings and loosen bolts. Shift the rotor over slightly and check for blade clearance. Retighten bolts making sure the rotor does not get pulled over to one side in the process. Retorque bolts to specifications.

6. Not cutting properly?
Check your rotor blades and flip or replace them if necessary. Tough conditions will also play a factor in how well the chopper is or isn’t cutting sufficiently.

FAQ

Q1. How long do the blades last?
A: It varies drastically due to cutting conditions, crop conditions, soil types, etc.. The typical life of a heat treated blade is approximately 350 hours. The carbide coated blade has a life approximately 1.5x the life of the heat treated blade.

Q2. What is the difference between the standard heat treated blade and carbide coated blade?
A: The carbide coated blade has a carbide coating on one side of the blade and will continue to create a sharp edge as it wears and cut more efficiently. The non carbide coated blade will dull and round off after a few hours.

Q3. How does the chopper perform in flax and soybean?
A: The blades will wear faster in these crops, but with carbide coated - self sharpening blades, they will hold their edge longer and cut more effectively.

Q4. Does the chopper need to be rebalanced each time you need to replace blades?
A: No, by replacing the blades as per section 1 or replacing **ALL** of the blades, the rotor should be fully balanced.

Q5. Any special requirements for chopping corn?
A: Yes, the chopper must run at a slower speed (800-1200 rpm) and the stationary blades must be pulled completely out of the chopper housing.

REDEKOP MANUFACTURING

1.866.REDEKOP (1.866.733.3567)

Saskatoon, Saskatchewan Canada S7K 3J7
info@redekopmfg.com
www.redekopmfg.com

For additional and the most up to date Manuals:

REDEKOP™

REDEKOP™